USN | | | | | | | | | | |

RV COLLEGE OF ENGINEERING®

(An Autonomous Institution affiliated to VTU)

III Semester B. E. Fast track Examinations Oct-2020

Electronics and Communication Engineering

ANALOG MICROELECTRONIC CIRCUITS

Time: 03 Hours ***Maximum Marks: 100***

Instructions to candidates:

1. Answer all questions from Part A. Part A questions should be answered in first three pages of the answer book only.
2. Answer FIVE full questions from Part B. In Part B question number 2, 7 and 8 are compulsory. Answer any one full question from 3 and 4 & one full question from 5 and 6

PART A

1	1.1	The aspect ratio of a $MOSFET$ is changed by 4 times, while I_D is maintained constant. Determine the change in the transconductance g_m.	01
	1.2	A $MOSFET$ carries a drain current of $1mA$ with $V_{DS} = 1V$ in saturation. Determine the change in I_D and the output impedance of the device, if V_{DS} rises to $1.5V$ and $\lambda = 0.2V^{-1}$	02
	1.3	Calculate the total charge stored in the channel of a $NMOS$ device if $C_{OX} = 10fF/\mu m^2, W = 5\mu m$, $L = 0.1\mu m$ and $V_{GS} - V_T = 1V$. Assume that the MOS device is in deep triode region.	01
	1.4	Determine the values of R_B and R_C in the circuit shown in Fig 1.4. 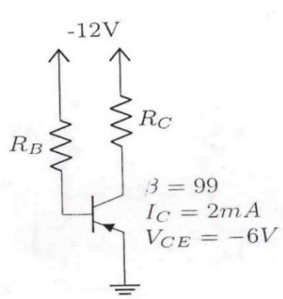 Fig.1.4 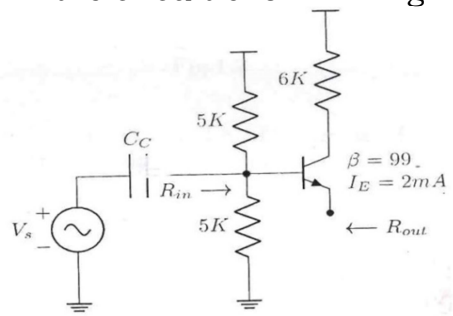 Fig.1.5	02
	1.5	Calculate the input resistance, R_{in} and the output resistance R_{out} for the circuit shown in Fig 1.5. Assume $\lambda = 0$.	02
	1.6	Calculate the value of R_E for the circuit shown in Fig 1.6. Assume β is very large for all the transistors and $V_{BE} = 700mV$ at $1mA$. 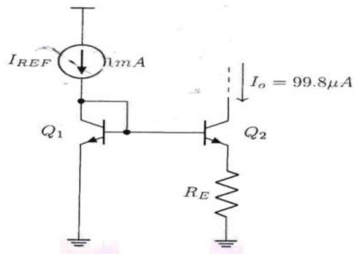 Fig 1.6 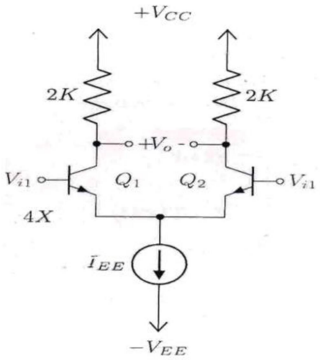 Fig 1.7	02

1.7	In Fig 1.7, $I_{EE} = 1mA$ and the emitter area, A_E of Q_1 is four times that of Q_2. Compute the voltage gain of the circuit.	02
1.8	Consider the amplifier circuit shown in Fig 1.8. The op-amp is specified to have output saturation voltages of $\pm 13V$. Calculate the output current, i_0 for an input sinusoidal signal having peak value, $v_p = 1V$. 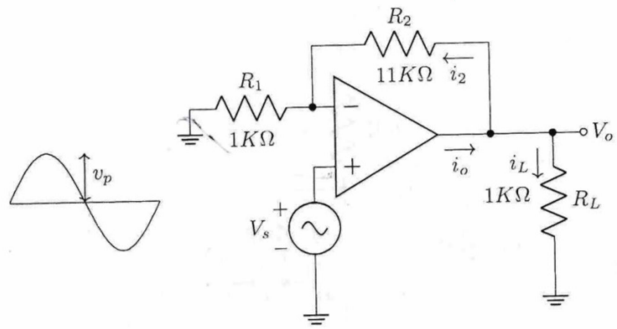 Fig 1.8	02
1.9	In a voltage amplifier using an op-amp, the unity gain frequency is $5MHz$ and slew rate is $62.8V/\mu sec$. Compute the maximum amplitude of a step input, so that the output is purely exponential.	01
1.10	An amplifier has open loop gain of $60dB$ and an input impedance= $400K\Omega$. If 4.9% voltage shunt negative feedback is provided to this amplifier, calculate the input impedance of the closed loop amplifier.	01
1.11	A power transistor with $T_j(\max) = 200^0C$ has $\theta_{JA} = 5^0C/W$. Calculate the maximum power dissipation for the transistor at an ambient temperature of 50^0C.	02
1.12	For a class-A series-fed power amplifier, biased with $R_L = 25\Omega$, $R_B = 1K\Omega$ and $V_{CC} = 19.7V$, calculate the input power. Assume$\beta = 100$.	01
1.13	The intrinsic gain of $MOSFET$ is _____; if $g_m = 2mA/V^2$, $\lambda = 0.1V^-$ and $I_D = 1mA$.	01

PART B

2	a	Using a suitable schematic diagram for common source amplifier with degenerative resistance, derive an expression for small signal gain and output impedance.	08
	b	In CS amplifier circuit of Fig 2b, determine input and output Q-points small-signal voltage gain, input resistance and the largest allowable input signal. The $NMOS$ device has $V_T = 1.5V$, $K_n' \frac{W}{L} = 0.25mA/V^2$ and $V_A = 50V$. Assume that C_{C1} and C_{C2} are infinite. 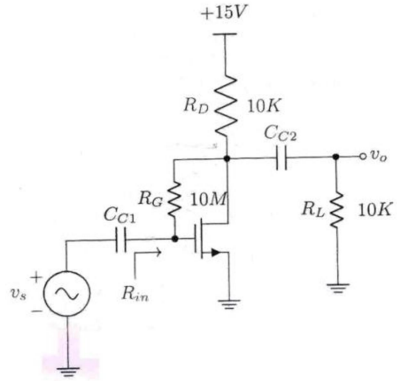 Fig 2b 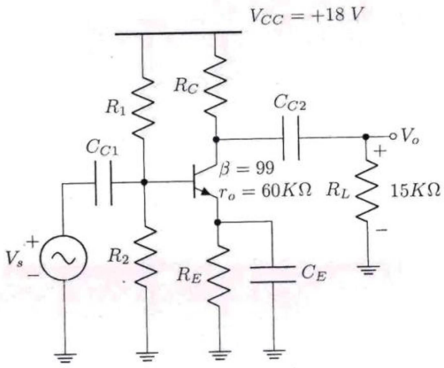 Fig 3a	08

3		Design the values of R_c, R_E, R_1 and R_2 in the amplifier circuit of Fig 3a, so that the operating point is fixed at $V_{CE} = 6.3V, I_C = 2.6mA$ with bias stabilization factor, $S(I_{CO}) = 10$ and the mid-frequency small signal voltage gain, $\frac{v_0}{v_s} = -125$. Design the values of C_{C1}, C_{C2} and C_E so that the lower cut-off frequency of the amplifier is $100Hz$. (Hint: Choose C_{C1} and C_{C2} so that the lower cut-off frequency because of C_{C1} and C_{C2} are at-least a decade lower than $100Hz$).	16
		OR	
4	a	In the amplifier circuit of Fig 4a determine the lower cut-off frequencies f_{LB}, f_{LC}, f_{LE} due to C_B, C_C, C_E respectively and the upper cut-off frequencies f_{Hi} and f_{Ho} due to the input and output circuit internal capacitances. Also, calculate the bandwidth of the amplifier. 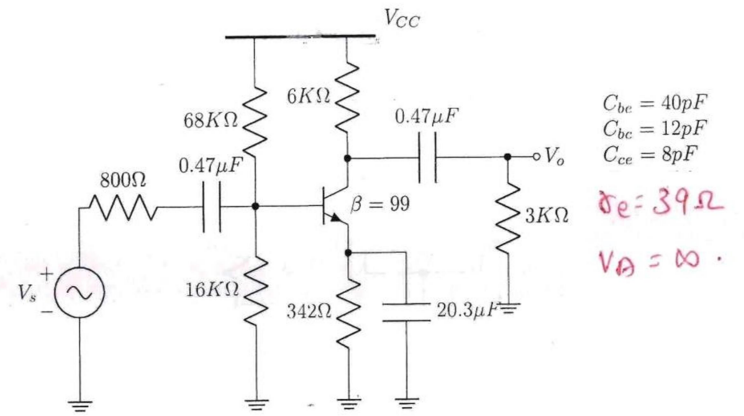 Fig 4a	
		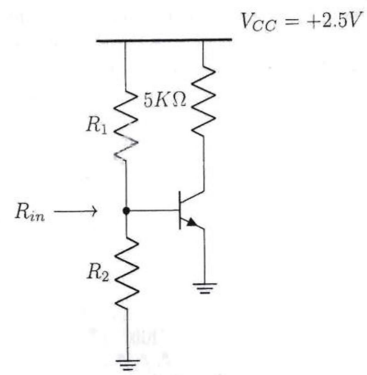 Fig 4b	12
	b	The circuit of Fig 4b must be designed for an input impedance of $10K\Omega$ and a g_m of at least $1/(260\Omega)$. Assume $\beta = 99, V_{BE} = 0.7V$ and $V_A = \infty$. Determine the minimum allowable values of R_1 and R_2.	04
5	a	Derive an expression for the output impedance of Wilson mirror using BJTs.	08
	b	Design the circuit in Fig 5b to obtain a dc voltage of $+0.2V$ at each of the drains of M_1 and M_2 when $V_{G1} = V_{G2} = 0$. Operate all transistors at $V_{OV} = 0.2V$ and assume that for the process technology in which the circuit is fabricated, $V_T = 0.5V$ and $K_n' = 250\mu A/V^2$. Neglect channel length modulation. Determine the values of R, R_D and the W/L ratios of M_1, M_2, M_3 and M_4. What is the input common-mode voltage range for the design? 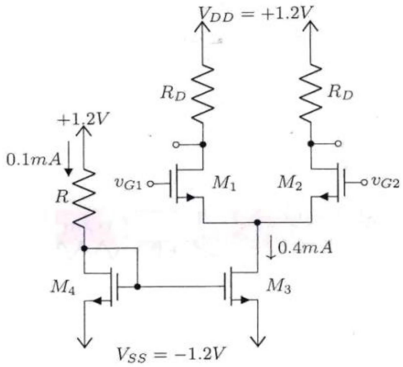 Fig 5b 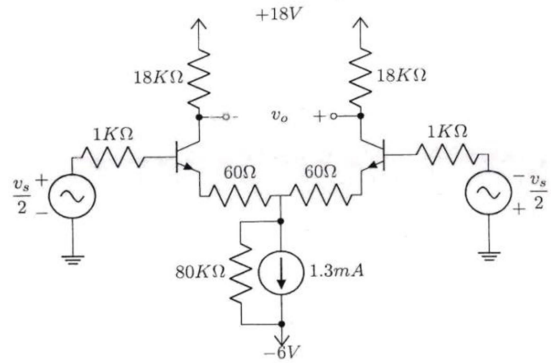 Fig 6b	08
		OR	

6	a	Derive an expression for the output impedance of Wilson mirror using $MOSFETs$.	06
	b	For the differential amplifier shown in Fig 6b, find the common input voltage range, the input differential resistance (R_{id}), the differential voltage gain (v_0/v_s), the common mode input resistance (R_{icm}), the common mode gain (A_{cm}) and the $CMRR$, if the collector resistances are of 0.5% tolerance. Assume $\beta = 99$ and $V_A = 100V$ for the transistors and $V_{CS}(min) = 1V$.	10
7	a	Design an instrumentation amplifier to realize a differential gain, variable in the range 0.5 to 50, utilizing a $50k$ pot as a variable resistor.	10
	b	Design a Schmitt trigger, suing an ideal op-amp to obtain $UTP = 4V$ and hysteresis $= 3V$. Assume op-amp $V_{SAT} = \pm 10V$.	06
8	a	The op-amp in the circuit of fig 8a has an impedance of $200K\Omega$, and output impedance of $4K\Omega$ and has an open loop gain of 2000. Determine $\frac{v_0}{v_s}$, R_{in} and R_{out} using feedback theory. 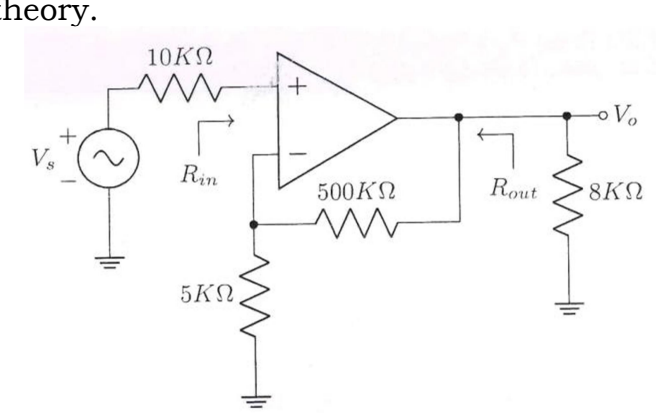 Fig 8a	10
	b	Draw the circuit of a complementary symmetry class-B power output stage and show that the maximum conversion efficiency is 78.5%.	06